DIESEL ENGINE		AC GENERATOR	
TYPE	8DK-20	TYPE	1FJ5 632
NO. OF CYL	8	OUTPUT	1500 kVA
REVOLUTION	900 min⁻¹	FREQUENCY	60 Hz
M A S S	10100 kg	M A S S	6500 kg
DAIHATSU DIESEL MFG. CO., LTD.		WUXI FENXI ELECTRICAL MACHINE CO.LTD	

COMMON BED MASS APPROX. 4200 kg
ACCESSORY MASS APPROX. 3400 kg
SET TOTAL MASS APPROX. 24200 kg (DRY)
APPROX. 25650 kg (WET)

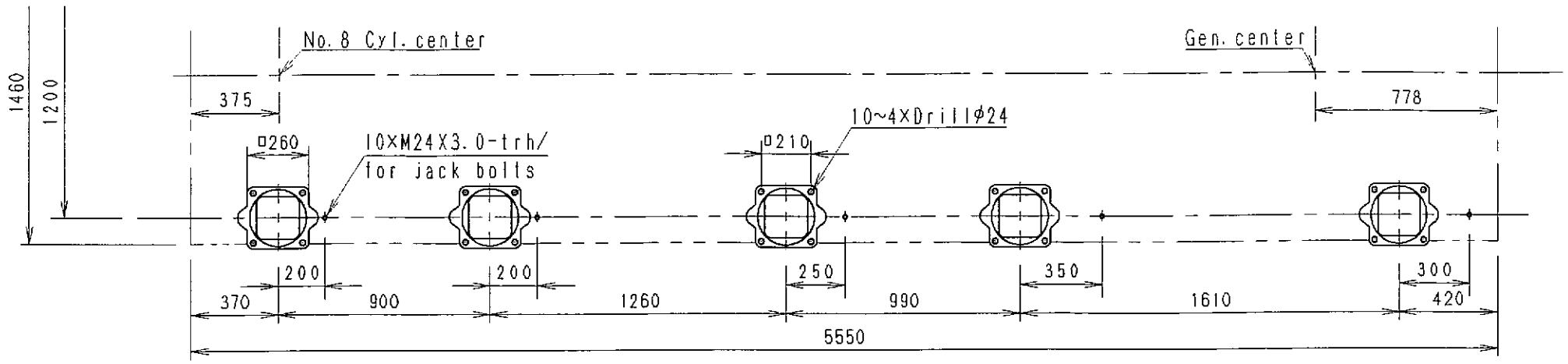

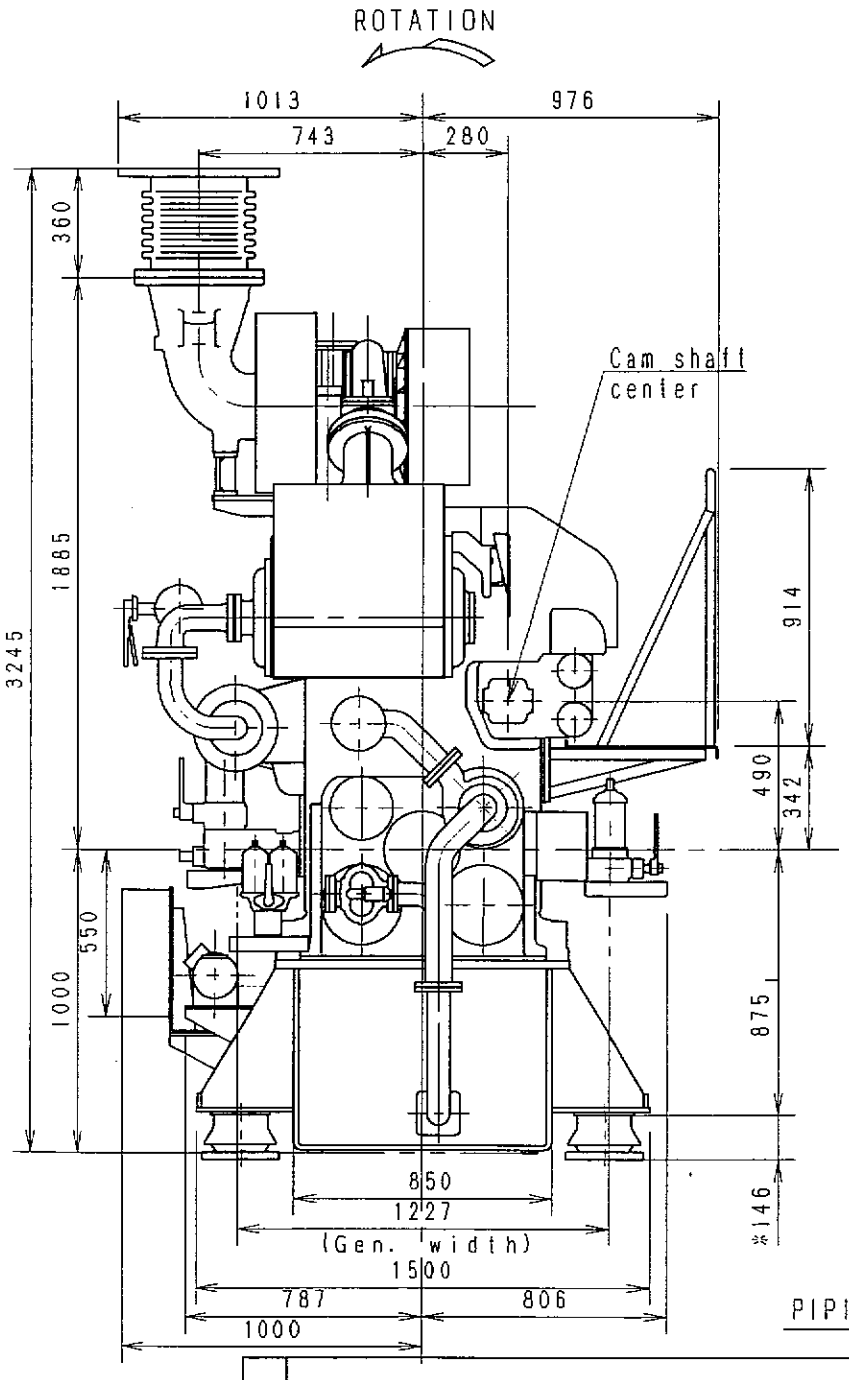

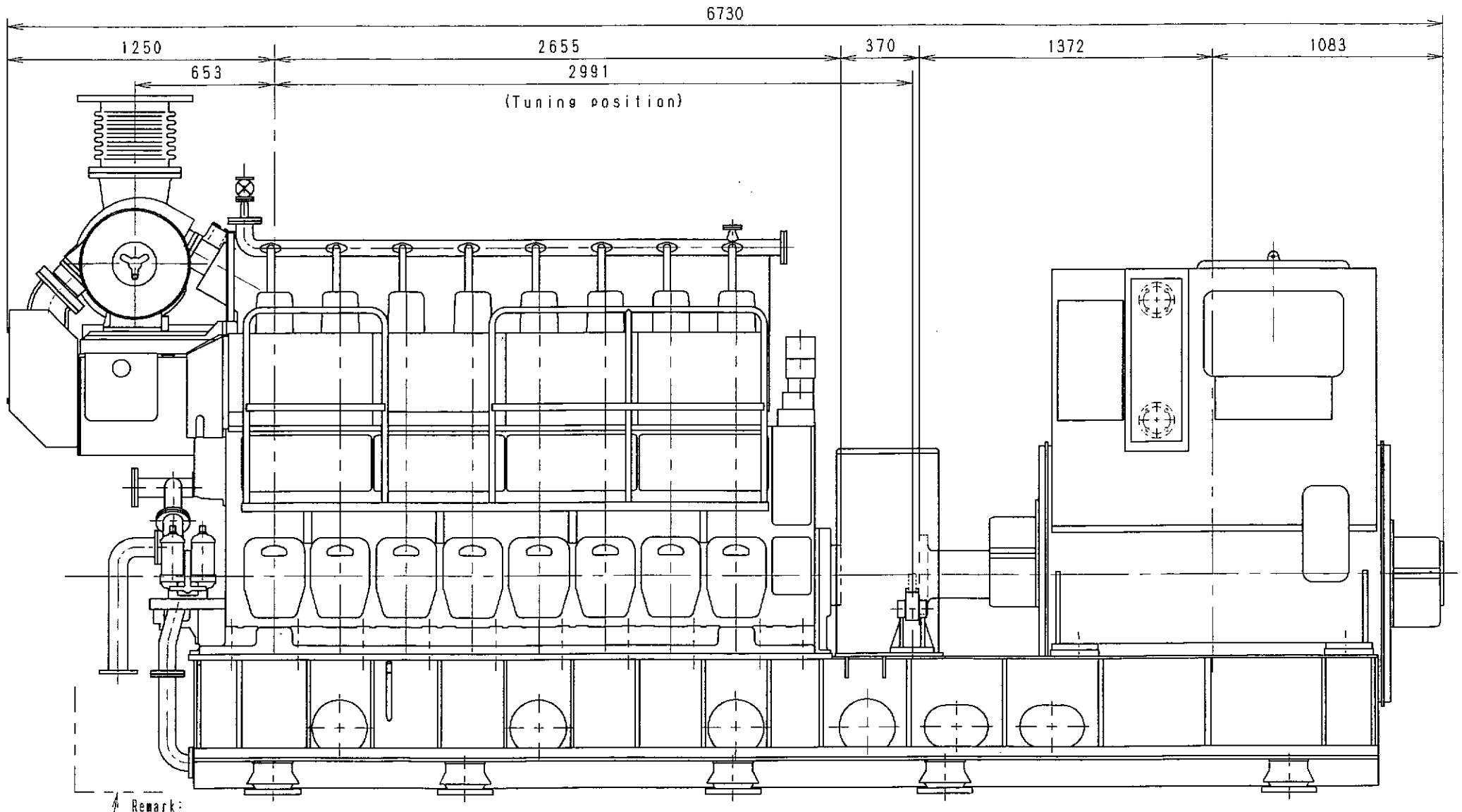

PIPING SPASE

Remark:
Flexible tubes for all the piping connections between engine and hull side are desirable to be set axially along crankshaft.
The thickness of isolation rubber marked with(*) shows planning value under loaded condition at installation. The thickness of it under free condition is 148mm.

⚠	FIRST DRAWING	2007/10/16	N. H

本図はダイハツディーゼル株式会社の所有物ですので、許可無く複写、転載及び第三者への開示を禁止します。
This drawing is the property of Daihatsu Diesel Mfg. Co., Ltd. Reproduction, use or disclosure to third parties without express authority of Daihatsu is strictly forbidden.

APPROVED	ISE WAKISHI	LIST NO. ADK20-5071-3	MATERIAL APRV.	GROUP 0	SCALE=1:25
CHECKED		BEFORE	MASS. -	QTY. -	A3
		REF. -	TYPE DK-20		
	SHINOKAWA KEISUKE	DAIHATSU DIESEL MFG. CO., LTD. OSAKA JAPAN	NAME チョッケツソウチズ：8DK-20：		
DRAWN	HATANO NAOKAZU		OUTLINE:8DK-20：		
DATE	2007/10/02		PARTS NO. AQA10005542	A	*

2009/02/06 TECHNICAL DEPARTMENT